Product Cut Sheet

FILLER PANEL

For airflow control and/or equipment mounting, fill empty spaces between mounted equipment.

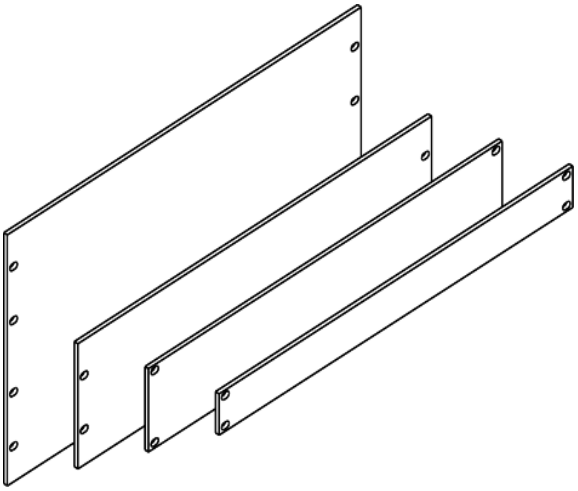

Filler Panels	
300	Filler Panels

	Thickness - in (mm)	Width
24	3/16 (4.763)	19″
25	3/16 (4.763)	23″
26	1/8 (3.18)	19″
27	1/8 (3.18)	23″

Color	
1	Gray
2	Computer Beige
5	Clear
7	Black
E	Glacier White

	Spaces - in (mm)	U
01	1.72 (43.7)	1
02	3.47 (88.1)	2
03	5.22 (132.6)	3
04	6.97 (177.0)	4
05	8.72 (221.5)	5
06	10.47 (265.9)	6
07	12.22 (310.4)	7
08	13.97 (354.8)	8
09	15.72 (399.3)	9
10	17.47 (443.7)	10
11	19.22 (488.2)	11
12	20.97 (532.6)	12

300	XX	-	X	XX

800-834-4969 in U.S. & Canada • www.chatsworth.com

CHATSWORTH PRODUCTS

©2013 Chatsworth Products, Inc. All rights reserved. CPI, CPI Passive Cooling, GlobalFrame, MegaFrame, Saf-T-Grip, Seismic Frame, SlimFrame, TeraFrame, Cube-iT Plus, Evolution, OnTrac, Velocity and QuadraRack are federally registered trademarks of Chatsworth Products. eConnect and Simply Efficient are trademarks of Chatsworth Products. All other trademarks belong to their respective companies. 6/13